DEMKE ELECTRONIC GMBH

Servosysteme
Leistungselektronik

DC-Transformer Type 121S3-3.3

Article number 121.001

5 Watt - single output - buck converter

General

- 1 : 5 input voltage range from 8 VDC up to 40 VDC
- Peak efficiency 90%
- Continuous no load and short circuit proof
- Very low input ripple
- Integrated EMI input filter
- No external circuitry required
- For ambient temperatures up to +71°C
- No derating
- Compact DIL24 metal case

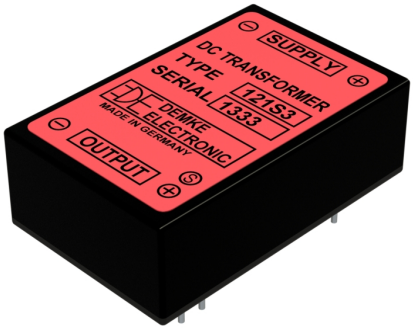

Description

The DC Tranformer 121S3-3.3 is a member of the 100-series buck power converter. The transformer includes a ***softstart***, an ***input undervoltage lockout*** and a ***permanent short circuit protection*** to ensure efficient module protection. The soft start allows current limitation and eliminates inrush current during startup. The short circuit protection completely protects the transformer against short circuits of any duration by a shut down and restores to normal operation when the overload is removed.

121 series types

Standard Types	Input voltage range / VDC	Output	
		VDC / VDC	IDC / A
121-vv	8 ... 40		
121S5-5.0	8 ... 40	5	1.5
121S3-3.3	8 ... 40	3.3	1.5

vv - replace vv by a desired output voltage

nominal input voltage = 24 VDC

Modifications are available upon request!

All technical and general information is provided in all conscience. However, completeness and accuracy cannot be guaranteed. Demke recommends to fully test the product in its determined application. Due to permanent improvements to our products, we reserve the right to change specifications at any time and without prior notification and without obligation to update products already supplied.

DC-Transformer Type 121S3-3.3

Article number 121.001

Electrical specifications

Characteristic	Symbol	Conditions	min	typ	max	Unit
Input voltage range	U_i	I_{oNom}	8	24	40	VDC
Input startup voltage	U_{Start}			7		VDC
Undervoltage lockout	U_{UVLO}			6		VDC
typ. Input surge voltage	U_{I_Surge}			t.b.d.		VDC
Output voltage	U_O	U_{iNom}, I_{oNom}		3.3		VDC
max. Output current	I_{O_max}	U_{iNom}			1.5	A
max. Input current	I_{I_max}				t.b.d.	A
No load input current	I_{iNL}	U_{iNom}, $I_o = 0$		t.b.d.		mA
Input current in shutdown condition	I_{iSD}			no shut down mode		mA
min. load to obtain specified output voltage	L_{min}	U_{iNom}	t.b.d.			%
Initial switch on time	t_{on}	U_{iNom}, I_{oNom}		t.b.d.		ms
SoftStart ramp-up-time	t_{SS}			t.b.d.		ms
Output voltage overshoot at initial switch-on	U_{OOs}			t.b.d.		mV
Input current overshoot at initial switch-on	I_{OOs}			0		%
Reflected ripple current at the input[1]	I_{IRR}			t.b.d.		mA
Generated ripple at the line voltage @20MHz[2]	ΔU_{iR}			t.b.d.		mV
Generated noise at the line voltage @20MHz[2]	ΔU_{iN}			t.b.d.		mV
Switching frequency	f_{SW}			130		kHZ
Output voltage ripple @20MHz	ΔU_{OR}	U_{iNom}, I_{oNom}		t.b.d.		mV
Output voltage noise @20MHz	ΔU_{ON}			t.b.d.		mV
Output voltage accuracy	ΔU_O	U_{iMin} .. U_{iMax} I_{oMin} .. I_{oMax}		t.b.d.		%
Static line regulation	ΔU_{IL}	U_{iMin} .. U_{iMax} I_{oNom}		t.b.d.		%
Static load regulation	ΔU_{OL}	U_{iNom} I_o=(0 .. 1)*I_{oNom}		t.b.d.		%
Dynamic load regulation[3]	t_d	U_{iMin} .. U_{iMax} I_o=(0.1 .. 0.9)*I_{oNom}		t.b.d.		ms
Efficiency	η	U_{iNom}, I_{oNom}		87		%
		U_{iNom}, 0.5*I_{oNom}		90		
Maximum admissible capacitive load	C_{oExt}	U_{iNom}, I_{oNom}			t.b.d.	µF
Mean Time To Failure	MTTF	SN29500 @ 70°C		t.b.d.		h

Table 2 - Electrical input and output data

Test conditions, unless otherwise noted:
Ui_nom = 24 VDC and full load, Ta = 25°C
all measurements without external components

(1) measured with a current probe (Tek -TCPA300)
(2) measured directly at the input/output pins with no external filter (Yokogawa DL9040)
(3) load jump performed with Electronic Load (Keisoku Giken ELA305)

All technical and general information is provided in all conscience. However, completeness and accuracy cannot be guaranteed. Demke recommends to fully test the product in its determined application. Due to permanent improvements to our products, we reserve the right to change specifications at any time and without prior notification and without obligation to update products already supplied.

DC-Transformer Type 121S3-3.3

Article number 121.001

Thermal characteristics

Characteristic	Symbol	min	max	Unit
Ambient temperature	T_A	-40	71	°C
max. case temperature (before thermal shutdown)	no thermal shutdown implemented			
storage temperature (device not in operation)	T_S	-10	65	°C
maximum relative humidity during storage	RH		75	%
max. storage time under worst conditions	t_{Smax}		25	d

Electromagnetic interference compliance

Norm	Description	satisfied
EN 61000-6-4	Emission standard for industrial environments	yes

Mechanical data and connections

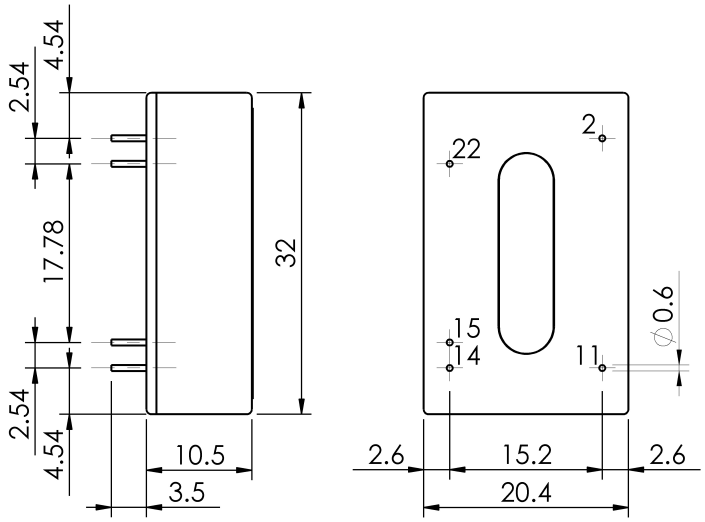

Pin	Symbol	Function
2	Vi-/Vo-	In- and output voltage negative
11	Vi-/Vo-	In- and output voltage negative
14	Vo+	Output voltage positive
15	Trim	Trimming the output voltage
22	Vi+	Input voltage positive

DIL24 metal case with plastic bottom cover, UL94-0 rated

connector: 0,6 mm Ø Pins for PCB / THT mounting

dimensions in mm

All technical and general information is provided in all conscience. However, completeness and accuracy cannot be guaranteed. Demke recommends to fully test the product in its determined application. Due to permanent improvements to our products, we reserve the right to change specifications at any time and without prior notification and without obligation to update products already supplied.